PERFORATORS.ORG
INTERNATIONAL PERFORATING FORUM

MENAPS 2016

Middle East and North Africa Perforating Symposium

MUSCAT, OMAN

Improving Entry Hole Consistency for Shaped Charges in Sequentially-Phased Perforating Carriers

MENAPS 2016-1

NOV 13TH, 2016

AUTHOR: Alphie Wright and Chris Sokolove, Hunting Titan

AGENDA

- Past Methods
- Consistent Hole (CH) Technology
- Opportunities for Advancement
- Comparison of Charges in Common Well Configuration
- Guidelines for Selection, Evaluation, Comparison and Feedback
- Recommendations for Improvement to API RP19B
- Conclusions

Conventional DP, SDP and BH Shaped Charges

- Maximum and Minimum Clearances
- Non-uniform distribution of entry hole diameters
- Erosion and slotting of small perforations
- Under-utilization of all perforations
- Less efficient well stimulation
- Slow ramp-up to higher treating pressures

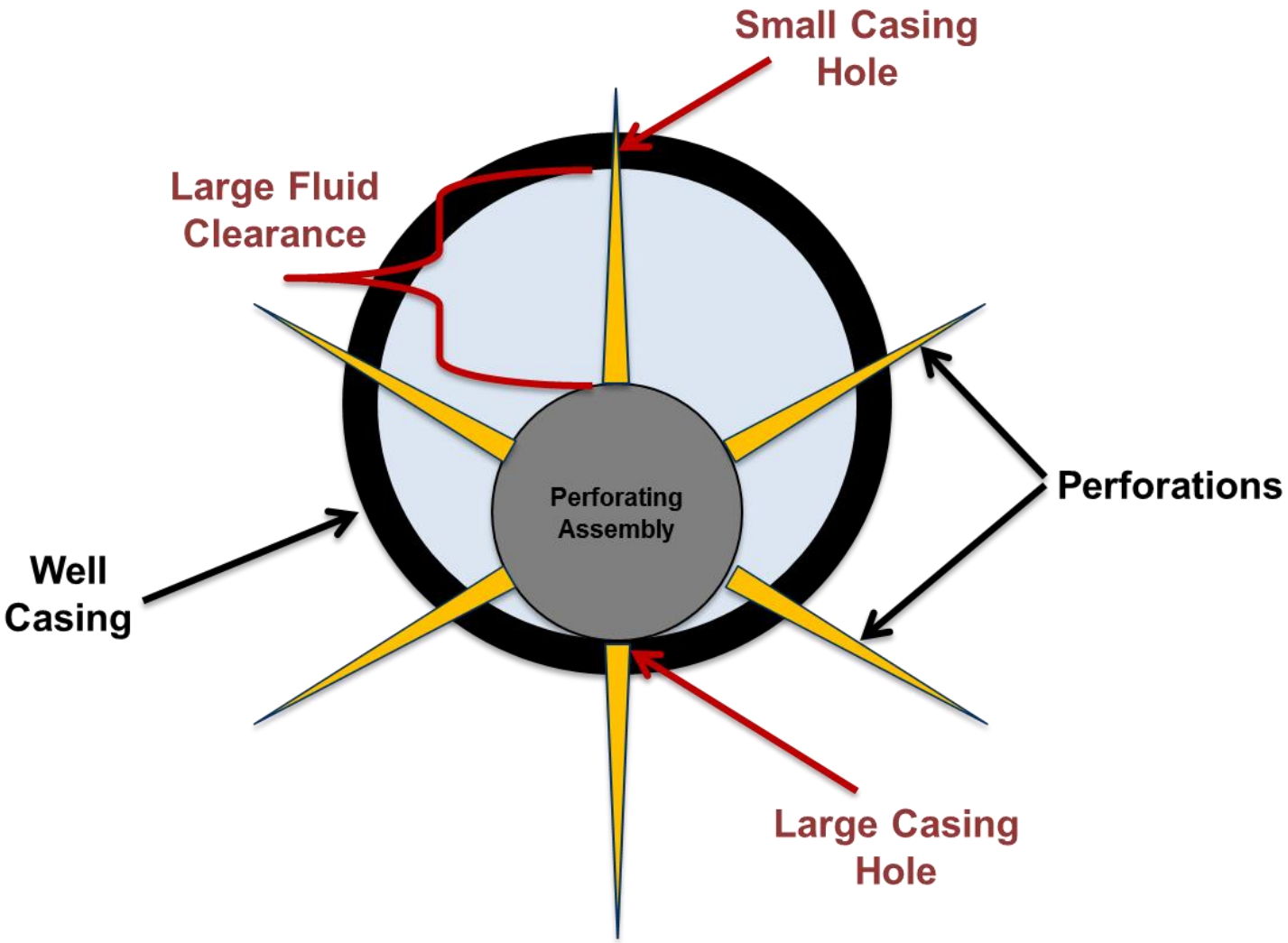

Past Example for Consistent Hole Technology

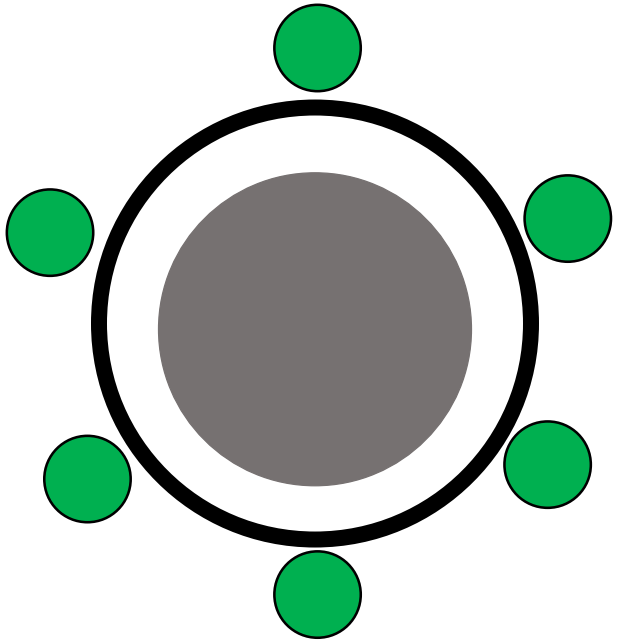

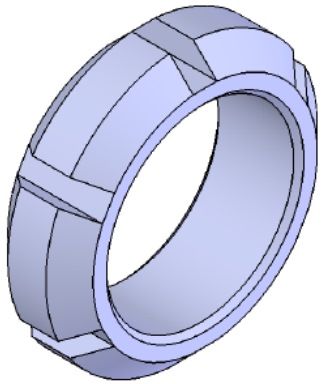

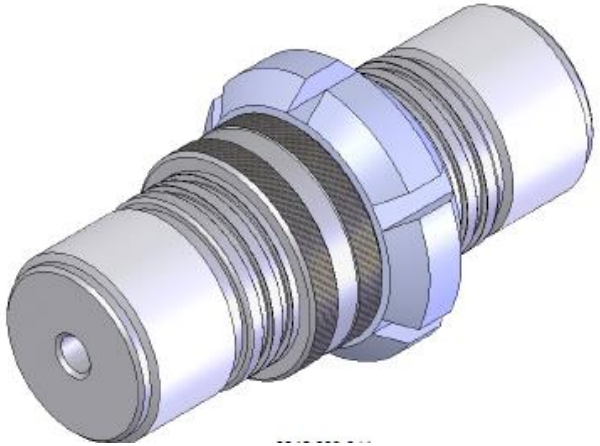

- Perforating Gun Centralized using:
  - Centralized fins welded to tandem subs, top subs, bull plugs
  - Centralized rings place over perforating guns
- Disadvantages:
  - Additional OD on downhole equipment
  - Additional costs for associated hardware

Shaped Charge Jet Profiles

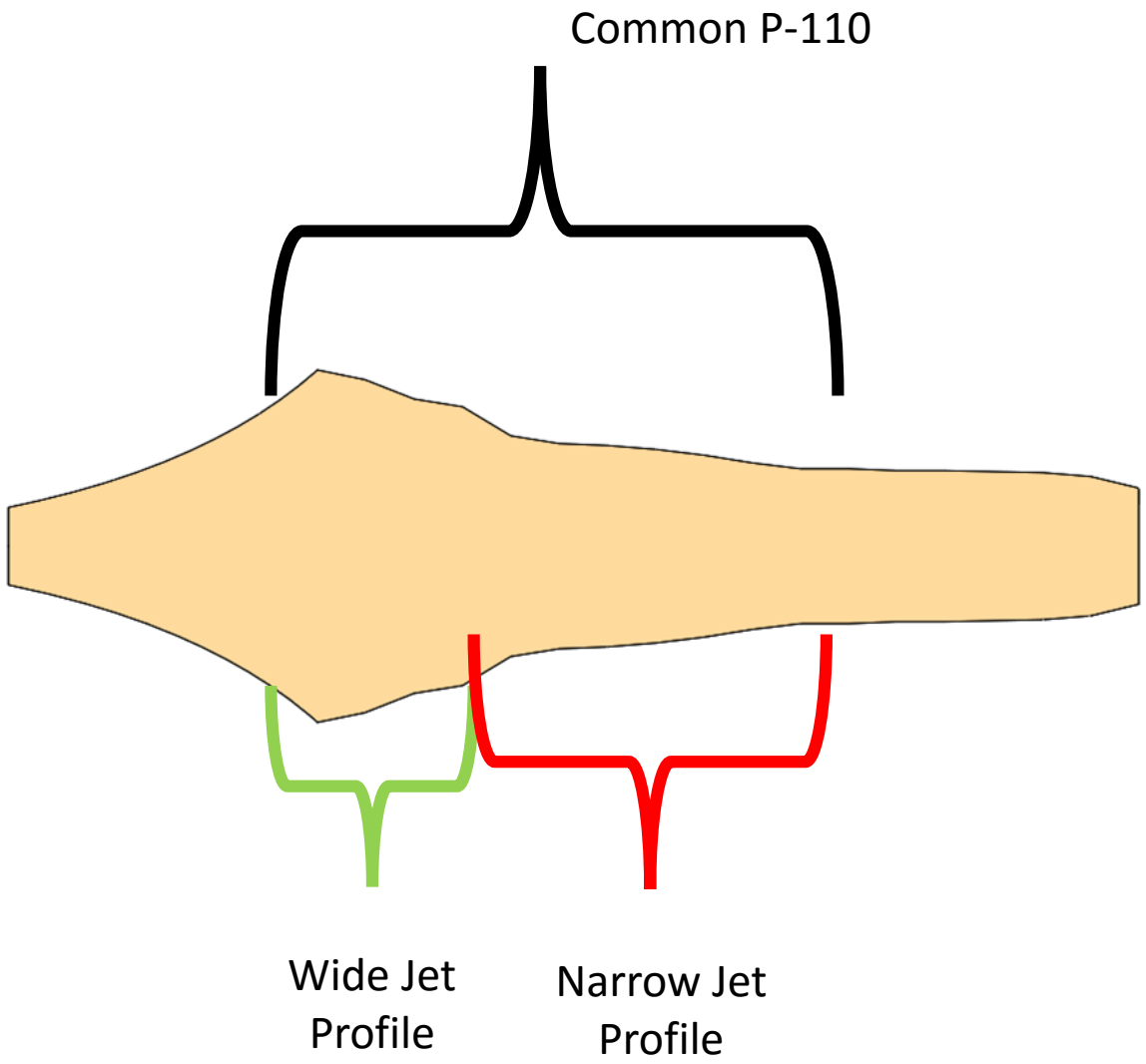

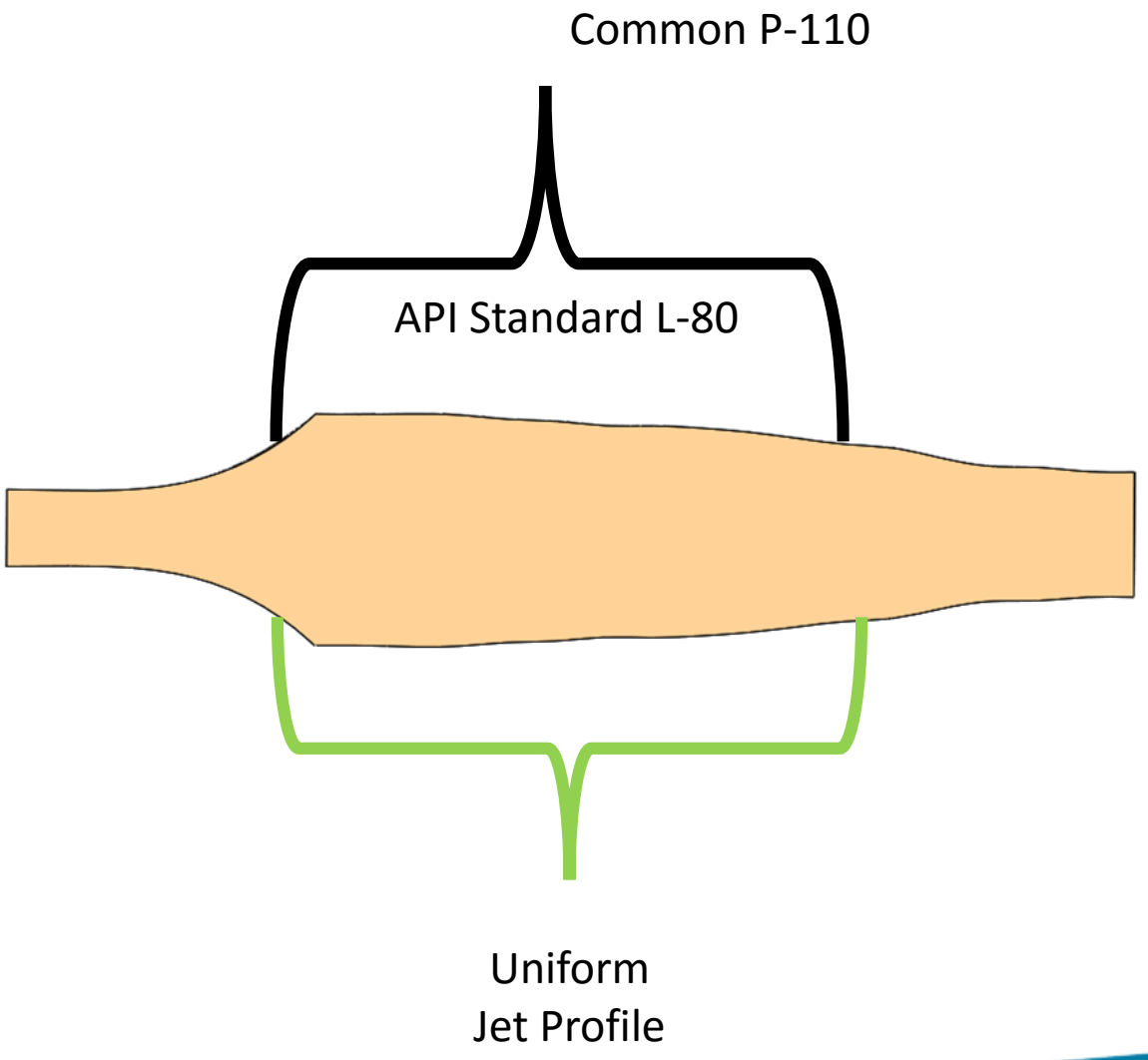

Importance of CH Technology

Importance of Consistent Hole Technology

CH Technology

Consistent Hole Technology enables opportunity for optimal well stimulation

Advancing Consistent Hole Technology

CH Technology

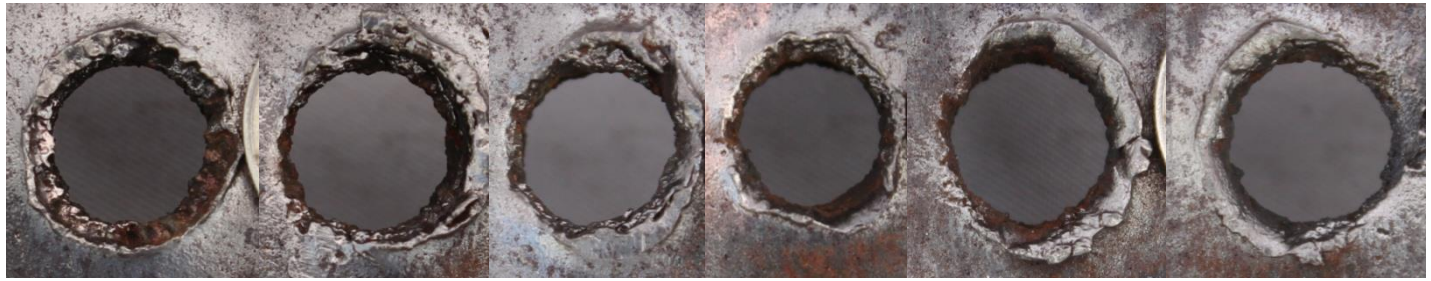

0°	60°	120°	180°	240°	300°	Phasing in Casing
0.0 in	0.5 in	1.1 in	1.5 in	1.1 in	0.5 in	Clearance

Conventional Charge

Unlikely that the same stimulation design is optimal for both perforation profiles

Consistent Hole Shaped Charges

CH Technology

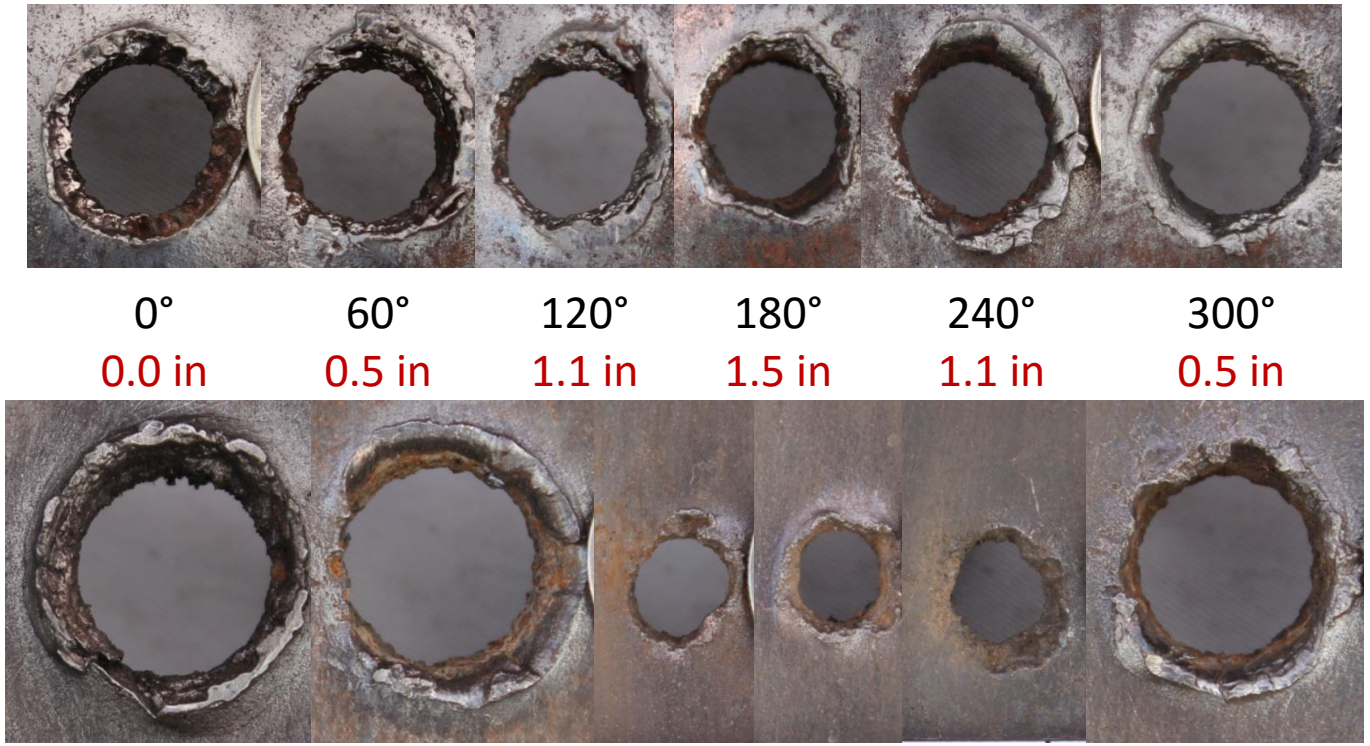

Conventional Charge

- New category of shaped charges
- Sequentially Perforating Design
  - 45° / 60° / 90° / 120° phasing
- Designed for decentralized or eccentered perforating guns
- Improves efficiency of well stimulation
- Achieves consistent hole size regardless of fluid clearance
- Advertised with Average Hole Size **AND** Variation in Hole Size

Consistent Hole Market Trend

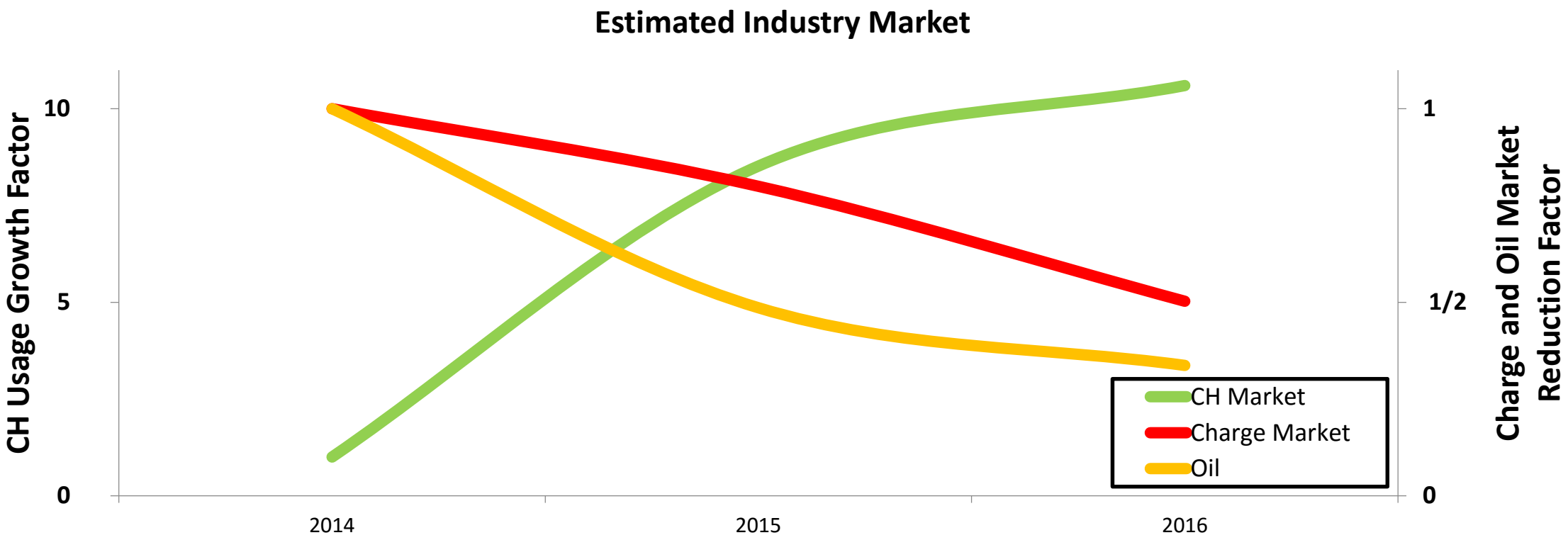

CH Technology has seen significant growth in the past couple of years

Consistent Hole System Growth

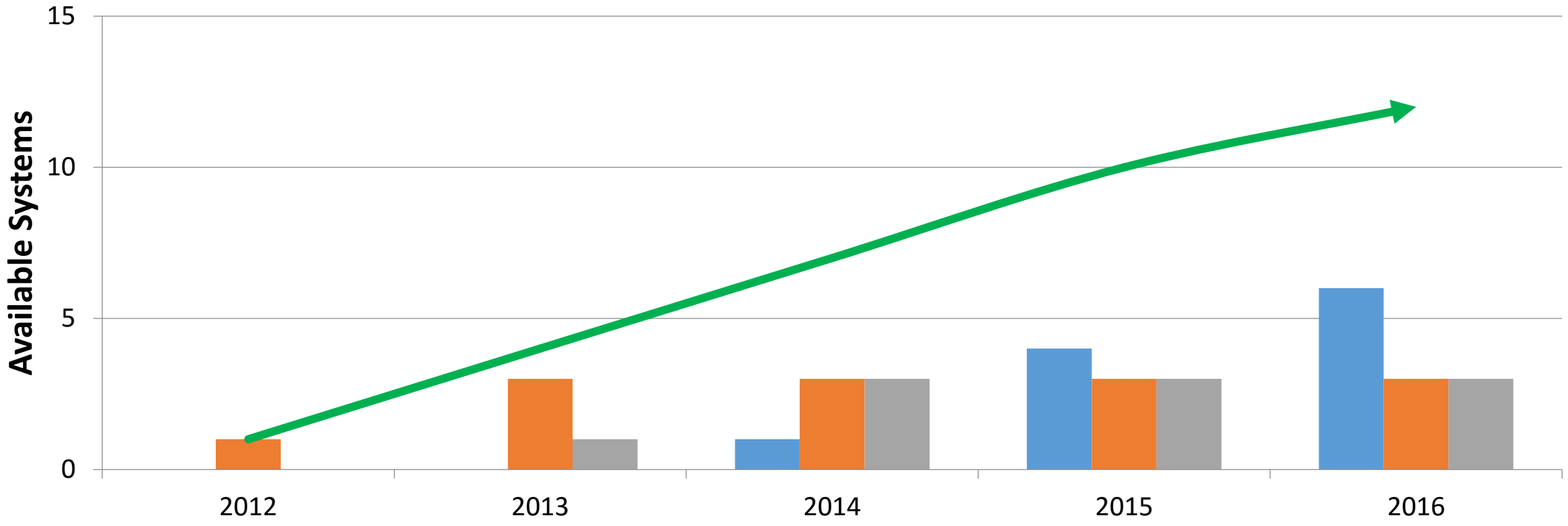

- Exponential growth in availability of CH perforating systems
- Growth driven by market demand for efficient technology

Why Growth in Consistent Hole Technology?

- …Operator ***Increased Injectivity*** by 20%
- …Evaluated 15 frac stages to show ***Lower Treating Pressures*** at the same pump rate or 8-10% higher pump rate
- …Two well studies show 10% ***Reduction in Breakdown Pressure***, 2% ***Reduction in Treating Pressure***, and 3% ***Increase in Proppant Placement***
- …**Reduced Injection Pressure** by 15%
- …Achieved and maintained **Faster Pump Rate** with ***Reduced Stimulation Pump Pressure***
- …***More Consistent Treating Rate*** with ***Increased Sand Concentration*** at ***Lower Pressure***
- …***Decentralized*** CH charge resulted in 10% ***Higher Treating Rate*** than a ***Centralized*** DP charge

Case study information compiled from multiple CH technology providers

Advancing Consistent Hole Technology

Existing case studies highlight benefits of CH Technology utilizing the same well simulation method

Good News!!

These studies have established a foundation for CH Technology

Are current well simulation methods and designs best?

Advancing Consistent Hole Technology

Conventional Shaped Charges

- Variation in hole size (a key design input) yields unpredictable stimulation result
- Accept that actual results differ from design – often without explanation

Consistent Hole Technology

- Consistent hole size increases control and predictability of stimulation → More strategic placement of perforations
- Removing hole size variability provides opportunity to investigate difference between design and actual results → Increased understand of effective stimulation

3-3/8” 6 SPF 60 deg. Gun
5-1/2” Casing

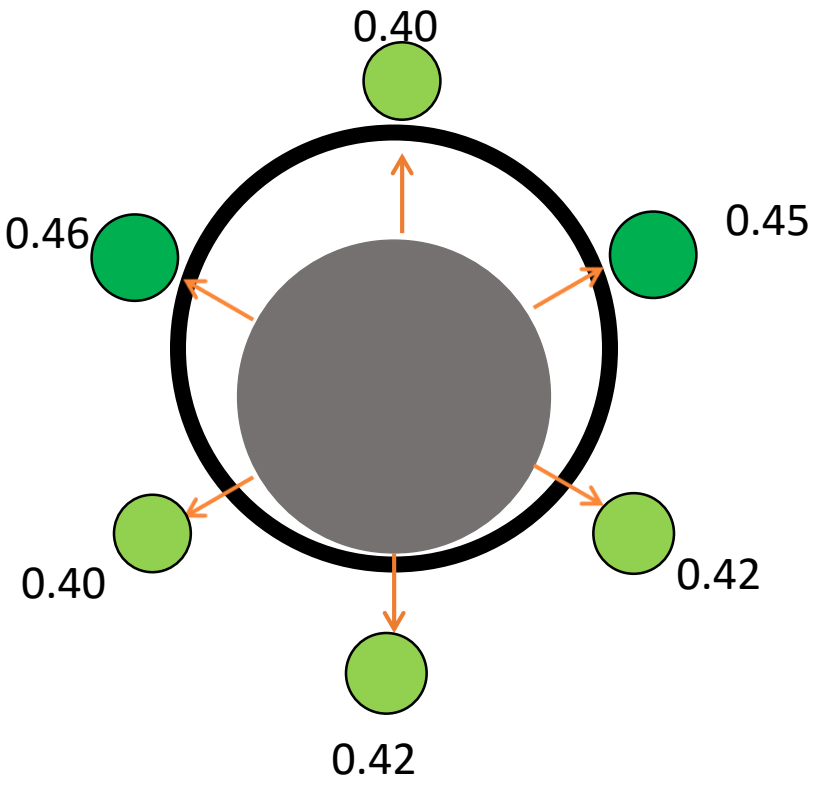

Average:	0.425 in.
Min:	0.40 in.
Max:	0.46 in.
Variation:	5.3%

API Test: 5-1/2” 23# P-110

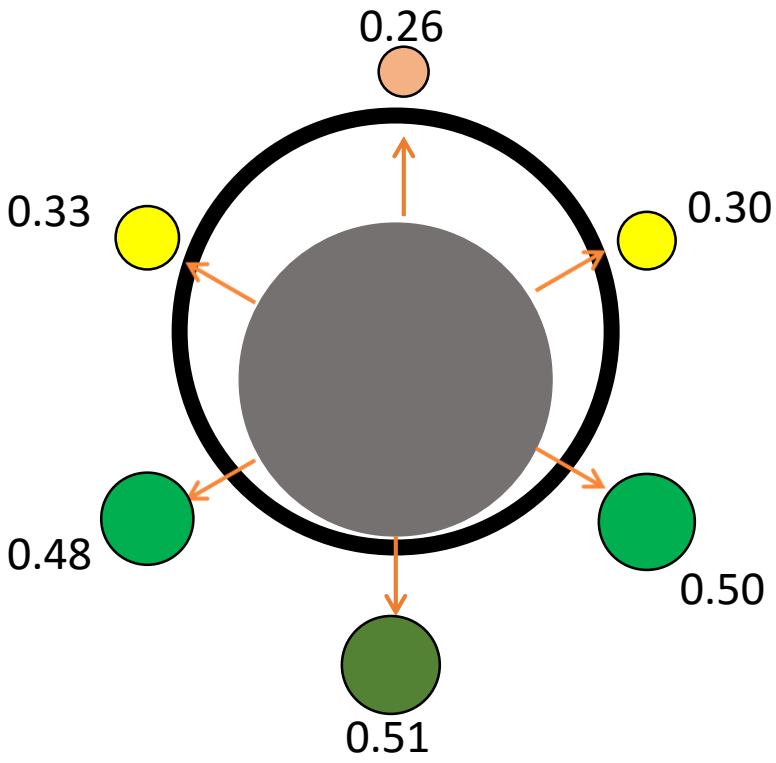

Average:	0.40 in.
Min:	0.26 in.
Max:	0.51 in.
Variation:	12.6%

API Test: 5-1/2” 17# L-80

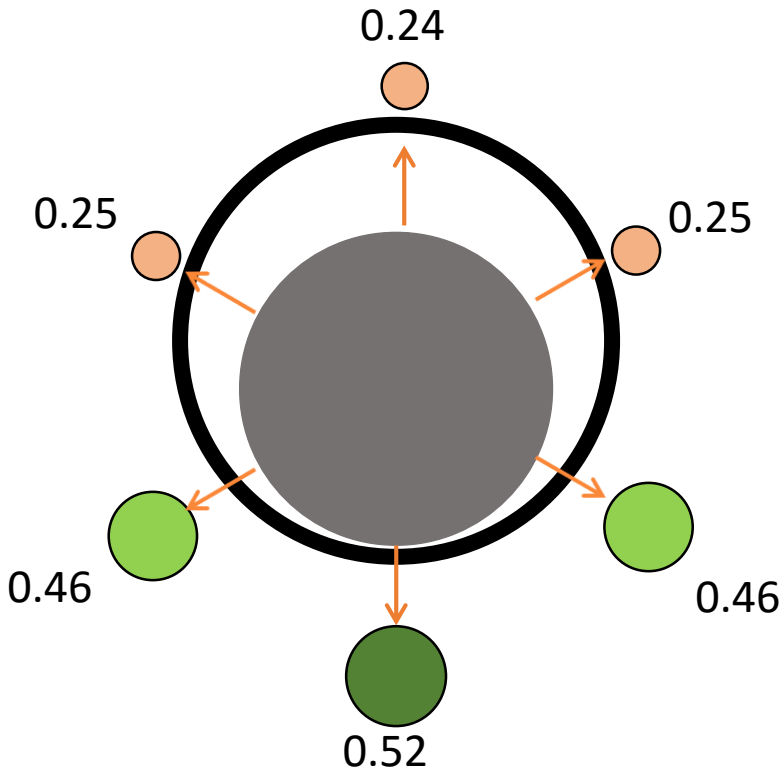

Conventional GH

Average:	0.36in.
Min:	0.24 in.
Max:	0.52 in.
Variation:	35.7%

Calculation of Variation

Range: $\frac{Max - Min}{Avg} X\ 100$

Coefficient of Variation: $\left(\frac{St.Dev}{Avg}\right) X100$

System	Min	Max	Range	% Range	CV
3-3/8” (5-1/2” P-110)	0.40	0.46	0.06	14.1%	5.8%
3-3/8” (5-1/2” L-80)	0.26	0.51	0.25	62.5%	28.0%
3-3/8” GH	0.24	0.52	0.28	77.1%	35.8%

Important

Statistically Important

Selection Principles

- Only compare performance data for charges tested:
  - Casing of equivalent or higher strength/weight
  - Fluid clearance of equivalent or greater distance
- Ensure the same calculation method is used when comparing variation
- Verify suitable Quality Control for CH Technology

Recommendations for API Standardized Testing

- Decentralized or Eccentered perforating gun
- Align perforating gun with one bank of shots at the **minimum** and **maximum** fluid clearances
- Common casing strength (i.e. P-110 casing)
- Common casing size (i.e. 5-1/2” casing for 3-3/8” gun)
- Minimum of two shots at each fluid clearance

Recommendation for Data Publishing

Gun Size	Casing	Min	Max	Avg.	Range	CV
3-3/8”	5-1/2” 23# P-110	0.39	0.47	0.44	0.08	5.9%

OD, Weight, Grade

Specific Hole Size Range

Comparison Values

Conclusion

- Consistent Hole Technology will continue to improve for the industry
- Consistent Hole Technology has proven to benefit the stimulation of the well
- There is need for standardized testing and data publication
  - Testing in heavier weight casings
  - Minimum and Maximum Clearances with at least 2 shots per clearance

QUESTIONS?
THANK YOU!